Work Order ID 73839

Friday, September 16, 2011 12:31:50 PM

Item ID: D2661-1 **Accept** **Setup Start** **Stop**

Revision ID:

Item Name: Saddle, LH Fwd Aft Out 206

Start Date: 9/16/2011 **Start Qty:** 10.00 **Cust Item ID:**

Required Date: 10/14/2011 **Req'd Qty:** 10.00 **Customer:**

Reference:

Run Start **Stop**

Approvals: **Process Plan:** _____ **Date:** _____ **Tooling:** _____ **Date:** _____

QC: _____ **Date:** _____ **SPC (Y/N):** _____ **Date:** _____

Draw Nbr	Revision Nbr
D2661	Rev D

Sequence ID/ Work Center ID	Operation Description	Set Up/ Run Hours	Tool ID	Tool #	Plan Code	Accept Qty	Reject Qty	Reject Number	Insp. Stamp
100	HAAS CNC VERTICAL MACHINING #1	0.00							
HAAS 1	**Memo**	0.00							
HAAS CNC vertical machine #1	Program part number and batch number.☐Fixturing Inspection last completed 11.10.21 by RG ☐1-Machine Step No 1 of Folio and visually inspect as per attached Dimension Sheet ☐2-Machine Step No 2 of Folio and visually inspect as per attached Dimension				RG 11.10.21	10	ϕ		
110	CONVENTIONAL MILLING MACHINE	0.00							
Mill Conv	**Memo**	0.00							
Conventional Milling Machine	Machine Keyway and inspect per attached dimension sheet				RG 11.10.21	10	ϕ		
120	QC2- Inspect parts off machine FAI/FAIB	0.00							
QC	**Memo**	0.00							
Quality Control					RG 11.10.21	10	ϕ		

Dart Aerospace Ltd

W/O:		WORK ORDER CHANGES					
DATE	STEP	PROCEDURE CHANGE	By	Date	Qty	Approval Chief Eng / Prod Mgr	Approval QC Inspector

Part No: _____ **PAR #:** _____ **Fault Category:** _____ **NCR:** Yes No **DQA:** _____ **Date:** _____

Resolution: _____ **Disposition:** _____ **QA: N/C Closed:** _____ **Date:** _____

NCR:		WORK ORDER NON-CONFORMANCE (NCR)						
DATE	STEP	Description of NC Section A	Corrective Action Section B			Verification Section C	Approval Chief Eng	Approval QC Inspector
			Initial Chief Eng	Action Description Chief Eng	Sign & Date			

NOTE: Date & initial all entries

H:\FORMS\Quality Assurance\approved QA\NCRWO RevE

Work Order ID 73839

Friday, September 16, 2011 12:31:50 PM

Item ID: D2661-1 **Accept** **Setup Start** **Stop**

Revision ID:

Item Name: Saddle, LH Fwd Aft Out 206

Start Date: 9/16/2011 **Start Qty:** 10.00 **Cust Item ID:**

Required Date: 10/14/2011 **Req'd Qty:** 10.00 **Customer:**

Reference:

Approvals: **Process Plan:** _____ **Date:** _____ **Tooling:** _____ **Date:** _____ **Run Start** **Stop**

QC: _____ **Date:** _____ **SPC (Y/N):** _____ **Date:** _____

Sequence ID/ Work Center ID	Operation Description	Set Up/ Run Hours	Tool ID	Tool #	Plan Code	Accept Qty	Reject Qty	Reject Number	Insp. Stamp
130	QC8- Inspect parts - second check	0.00	D.A 11/6/24			10	∅		
QC	Memo	0.00							
Quality Control									
140	Chemical Conversion Coat per QSI005 4.1	0.00				10	∅		11/10/24
HandFinish	Memo	0.00				counted			
Hand Finishing									
150	White Gloss(Ref:4.3.5.1) per QSI005 4.3-Alum	0.00				10X	∅		11/10/25
Powdercoat	Memo	0.00							
Powder Coating	START TIME: 8:00 ☐OVEN TEMPERATURE: 320°F ☐FINISH TIME: 8:30								

M117745

Dart Aerospace Ltd

W/O:		WORK ORDER CHANGES					
DATE	STEP	PROCEDURE CHANGE	By	Date	Qty	Approval Chief Eng / Prod Mgr	Approval QC Inspector

Part No: _____ **PAR #:** _____ **Fault Category:** _____ **NCR:** Yes No **DQA:** _____ **Date:** _____

Resolution: _____ **Disposition:** _____ **QA: N/C Closed:** _____ **Date:** _____

NCR:		WORK ORDER NON-CONFORMANCE (NCR)						
DATE	STEP	Description of NC Section A	Corrective Action Section B			Verification Section C	Approval Chief Eng	Approval QC Inspector
			Initial Chief Eng	Action Description Chief Eng	Sign & Date			

NOTE: Date & initial all entries

H:\fFORMS\Quality Assurance\approved QA\NCRWO RevE

Work Order ID 73839

Friday, September 16, 2011 12:31:50 PM

Item ID: D2661-1 **Accept** **Setup Start** **Stop**

Revision ID:

Item Name: Saddle, LH Fwd Aft Out 206

Start Date: 9/16/2011 **Start Qty:** 10.00 **Cust Item ID:**

Required Date: 10/14/2011 **Req'd Qty:** 10.00 **Customer:**

Reference:

Run Start **Stop**

Approvals: **Process Plan:** _____ **Date:** _____ **Tooling:** _____ **Date:** _____

QC: _____ **Date:** _____ **SPC (Y/N):** _____ **Date:** _____

Sequence ID/ Work Center ID	Operation Description	Set Up/ Run Hours	Tool ID	Tool #	Plan Code	Accept Qty	Reject Qty	Reject Number	Insp. Stamp
160	QC3- Inspect Part Finish	0.00							
QC	Memo	0.00				10 counted	ϕ		11/10/2
Quality Control									
170	Identify as per dwg & Stock Location 5476	0.00							
Packaging	Memo	0.00				80	10	10-25	
Packaging									
180	QC21- Final Inspection - Work Order Release	0.00							
QC	Memo	0.00							11/10/26
Quality Control									

MF 11-10-25

Dart Aerospace Ltd

W/O:		WORK ORDER CHANGES					
DATE	STEP	PROCEDURE CHANGE	By	Date	Qty	Approval Chief Eng / Prod Mgr	Approval QC Inspector

Part No: _____ **PAR #:** _____ **Fault Category:** _____ **NCR:** Yes No **DQA:** _____ **Date:** _____

Resolution: _____ **Disposition:** _____ **QA: N/C Closed:** _____ **Date:** _____

NCR:		WORK ORDER NON-CONFORMANCE (NCR)						
DATE	STEP	Description of NC Section A	Corrective Action Section B			Verification Section C	Approval Chief Eng	Approval QC Inspector
			Initial Chief Eng	Action Description Chief Eng	Sign & Date			

NOTE: Date & initial all entries

H:\FORMS\Quality Assurance\approved QA\NCRWO RevE

Picklist Print

Friday, September 16, 2011 12:31:47 PM

Work Order ID: 73839

Parent Item: D2661-1

Parent Item Name: Saddle, LH Fwd Aft Out 206

Start Date: 9/16/2011 **Required Date:** 10/14/2011

Start Qty: 10.00 **Required Qty:** 10.00

Comments: IPP: C□00.11.01□Removed P/O for Powder Coat - in house process□EC□
IPP Rev:D As per Rev D 07-03-19 JLM

Component Item ID/ Item Name	Replacement Item ID	Mfg/ Purch	Bin Item	Primary Location	Last Location	Route Seq ID	Unit of Measure	Qty on Hand	Qty per Kit	Total Qty	Qty Issued	Date Issued	Status
D6101-003 Saddle Billet, 7075		Manufactured	No			100	Each	13.0000	1	10 RQ 11.10.21			

Location	Loc Qty	Loc Code
MAT040	8	
72226	8	
MAT44	5	
72226	5	

73780

10

Dart Aerospace Ltd

W/O:		WORK ORDER CHANGES					
DATE	STEP	PROCEDURE CHANGE	By	Date	Qty	Approval Chief Eng / Prod Mgr	Approval QC Inspector

Part No: _____ **PAR #:** _____ **Fault Category:** _____ **NCR:** Yes No **DQA:** _____ **Date:** _____

Resolution: _____ **Disposition:** _____ **QA: N/C Closed:** _____ **Date:** _____

NCR:		WORK ORDER NON-CONFORMANCE (NCR)						
DATE	STEP	Description of NC Section A	Corrective Action Section B			Verification Section C	Approval Chief Eng	Approval QC Inspector
			Initial Chief Eng	Action Description Chief Eng	Sign & Date			

NOTE: Date & initial all entries

DART AEROSPACE LTD	Work Order:	
Description: 206 Saddle, Inboard, Left side	**Part Number:**	**D2662-1**
Inspection Dwg: D2662 Rev. D		**Page 1 of 1**

Inspect dimensions highlighted on inspection sheet drawing D2662 Rev. D and record below:

					Recorded Actual Dimensions						
Dim	**Min**	**Max**	**Go/No Go Gauge** 10 3		**1**	**2**	8 ~~3~~ 9	**4**	5 ~~By~~	6 ~~Date~~	7
A	0.100	0.140	.135	.135	.135	.135	.135	.135	.135	.135	.135
B	0.100	0.140	.124	.124	.124	.124	.124	.124	.124	.124	.124
C	1.125	1.145	1.137	1.137	1.137	1.137	1.137	1.137	1.137	1.137	1.137
D	0.615	0.685	.685	.685	.685	.685	.685	.685	.685	.685	.685
E	0.240	0260	.254	.254	.254	.254	.254	.254	.254	.254	.254
F	1.313	1.343	1.323	1.323	1.323	1.323	1.323	1.323	1.323	1.323	1.323
G	0.210	0.230	.223	.223	.223	.223	.223	.223	.223	.223	.223
H	0.100	0.180	.135	.135	.135	.135	.135	.135	.135	.135	.135
I	2.470	2.510	2.491	2.491	2.491	2.491	2.491	2.491	2.491	2.491	2.491
J	1.565	1.585	1.576	1.576	1.576	1.576	1.576	1.576	1.576	1.576	1.576
K	0.235	0.240	.238	.238	.238	.238	.238	.238	.238	.238	.238
L	0.100	0.120	.112	.112	.112	.112	.112	.112	.112	.112	.112
M	0.990	1.010	.999	.999	.999	.999	.999	.999	.999	.999	.999
N	0.510	0.515	.512	.512	.512	.512	.512	.512	.512	.512	.512
O	5.990	6.010	5.997	5.997	5.997	5.997	5.997	5.997	5.997	5.997	5.997
P	1.245	1.255	1.250	1.250	1.250	1.250	1.250	1.250	1.250	1.250	1.250
Q	2.495	2.505	2.500	2.500	2.500	2.500	2.500	2.500	2.500	2.500	2.500
R	0.313	0.318	.313	.313	.313	.313	.313	.313	.313	.313	.313
S	0.315	0.322	.315	.315	.315	.315	.315	.315	.315	.315	.315
T	2.495	2.505	2.500	2.500	2.500	2.500	2.500	2.500	2.500	2.500	2.500
U	1.357	1.367	1.362	1.362	1.362	1.362	1.362	1.362	1.362	1.362	1.362
V	0.787	0.807	.795	.795	.795	.795	.795	.795	.795	.795	.795
W	0.540	0.560	.548	.548	.548	.548	.548	.548	.548	.548	.548
X	1.674	1.684	1.679	1.679	1.679	1.679	1.679	1.679	1.679	1.679	1.679
Y	0.257	0.262	.257	.257	.257	.257	.257	.257	.257	.257	.257
Z	0.912	0.932	.922	.922	.922	.922	.922	.922	.922	.922	.922
AA	0.490	0.510	.499	.499	.499	.499	.499	.499	.499	.499	.499
AB	0.178	0.198	.188	.188	.188	.188	.188	.188	.188	.188	.188
AC											
AD											
AE											
AF											
Accept/Reject											

Measured by:	RS
Date:	11.10.23

Audited by	B.A
Date:	11/10/24

Rev	Date	Change	Revised by	Approved
A		New Issue	RF	
B	99.04.19	Incorporated DSI 9095, DSI 9102 & DSI 9122 Rev. A	RF	
C	99.11.11	Added Dim. R-T	RF	
D	02.12.12	R-format; Added Dim. U-W & DT8683, DT8686 & DT8695 A/B	KJ/RF	
E	06.07.05	Revised per drawing revision C	KJ/JLM	
F	07.03.21	Revised per drawing revision D	KJ/JLM	

DESIGN	DRAWN BY	DART AEROSPACE USA, INC. PORT HADLOCK, WA	
CHECKED PH	APPROVED	DRAWING NO. D2661	REV. D SHEET 1 OF 1
DATE 06.11.08		TITLE SADDLE OUTSIDE	SCALE 1:3

A	97.03.25	NEW ISSUE
B	97.07.11	ANGLE AND NOTES ADDED
C	06.05.29	INCORPORATE DEO 9122, 9102, 9095
D	06.11.08	R0.188 WAS R0.30; ø0.316 WAS ø0.313

RELEASED 07.02.12

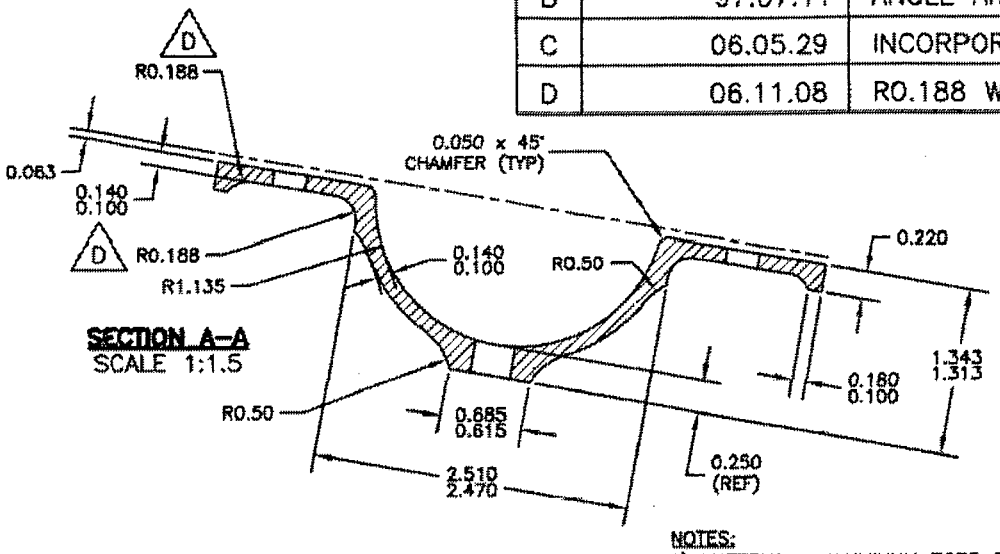

SECTION A–A
SCALE 1:1.5

NOTES:
1) MATERIAL: ALUMINUM 7075–T7351 (QQ–A–250/12)
(MAKE FROM D6101–003 SADDLE BILLET, 7075)
2) FINISH: CHEMICAL CONVERSION COAT PER DART QSI 005 4.1
POWDER COAT GLOSS WHITE (4.3.5.1) PER DART QSI 005 4.3
3) TOLERANCES ARE PER DART QSI 018 UNLESS OTHERWISE NOTED
4) BREAK ALL SHARP EDGES 0.010 TO 0.020
5) D2661–1 SHOWN (D2661–2 IS OPPOSITE)
6) ALL DIMENSIONS ARE IN INCHES

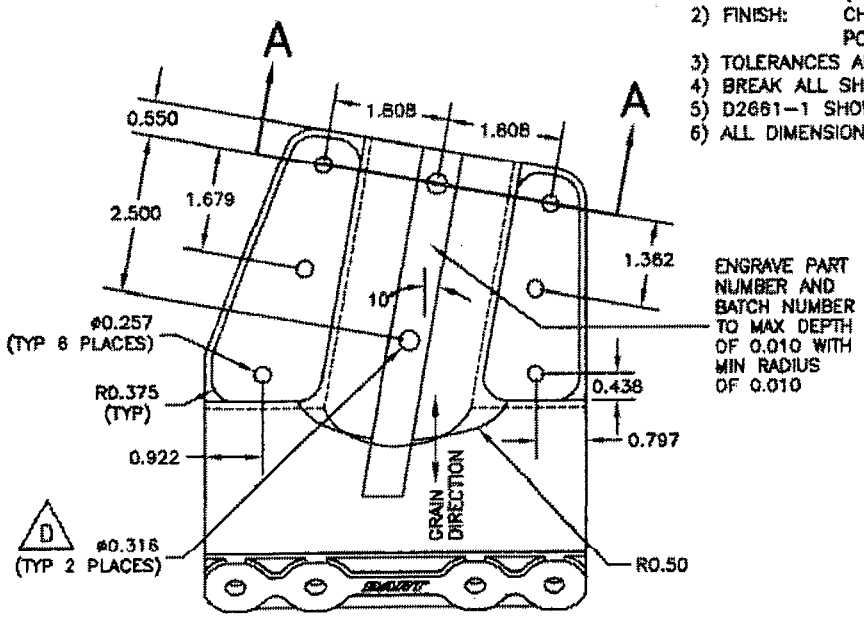

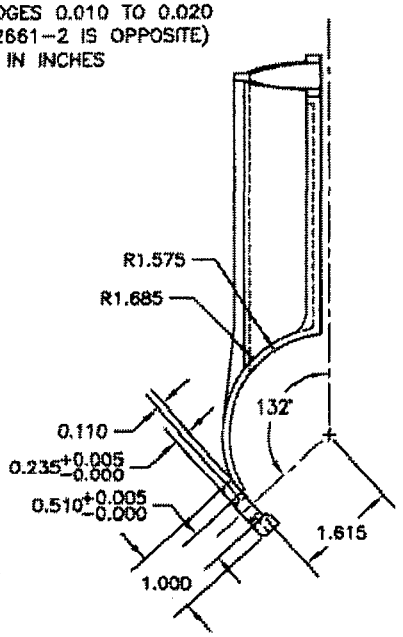

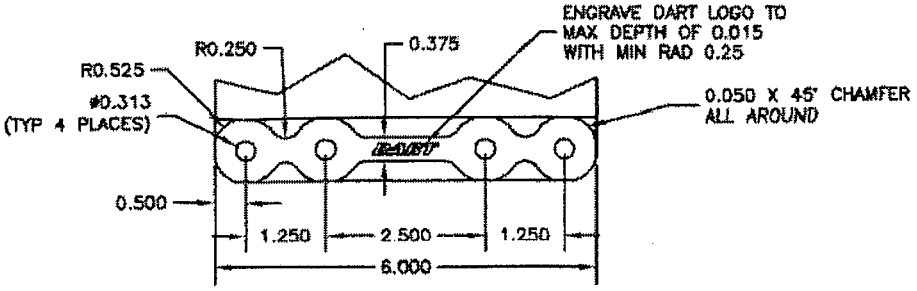

D2661–1 SADDLE OUTSIDE